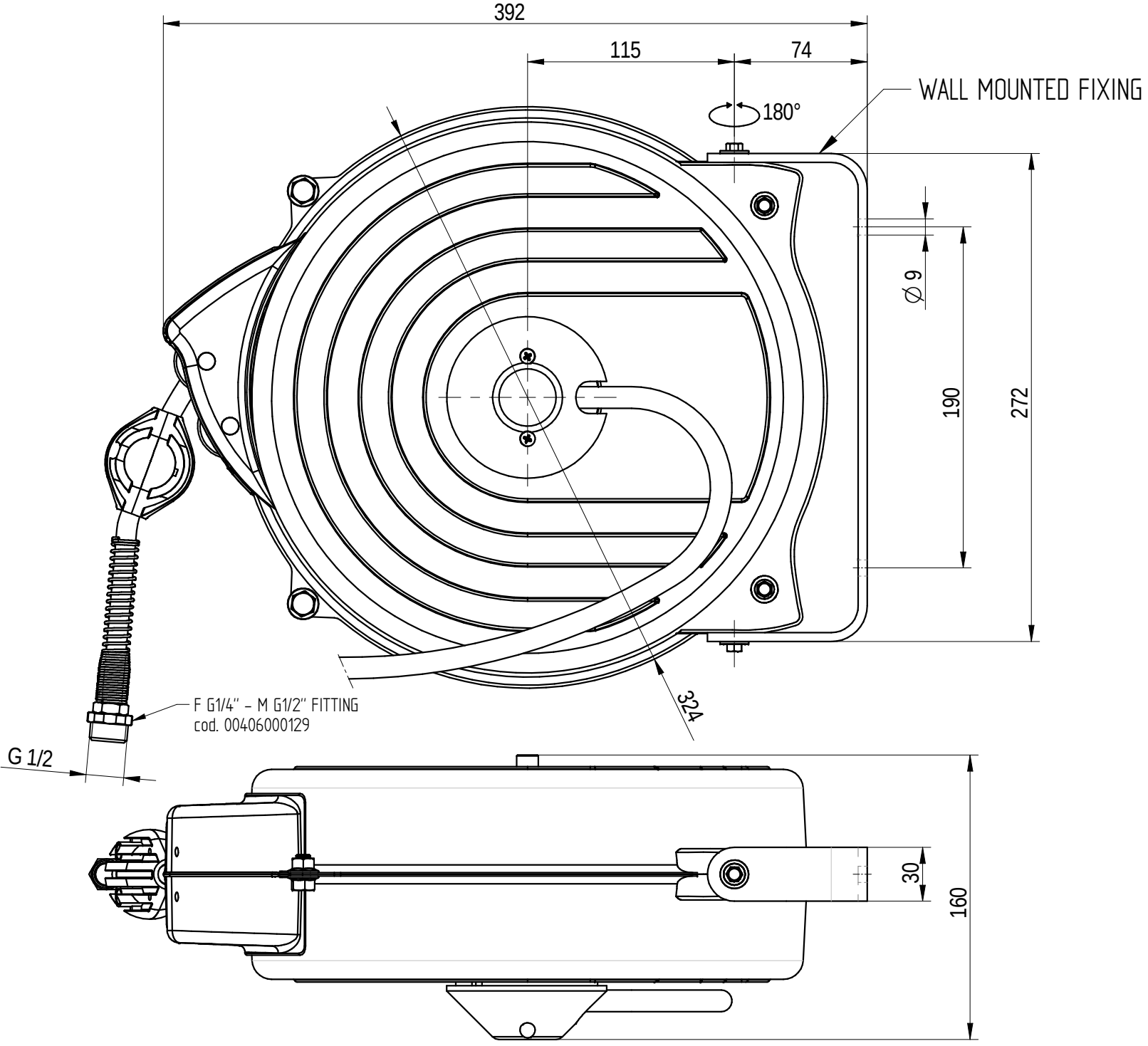
392
115
74
180°
WALL MOUNTED FIXING
∅ 9
190
272
324
F G1/4" - M G1/2" FITTING
cod. 00406000129
G 1/2
30
160