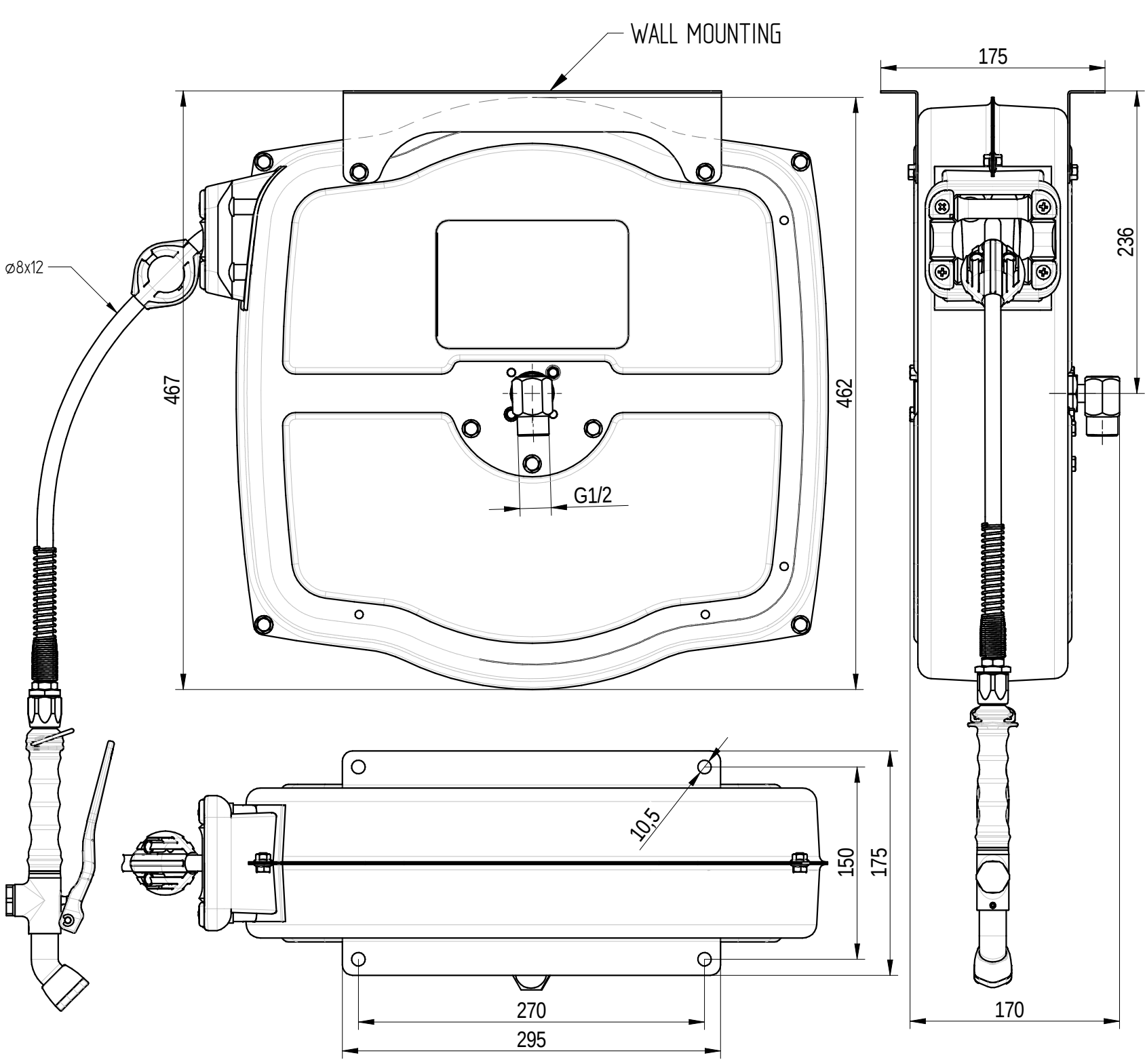
WALL MOUNTING
175
236
ø8x12
467
462
G1/2
10,5
150
175
270
295
170